TYPICAL APPLICATION CIRCUIT

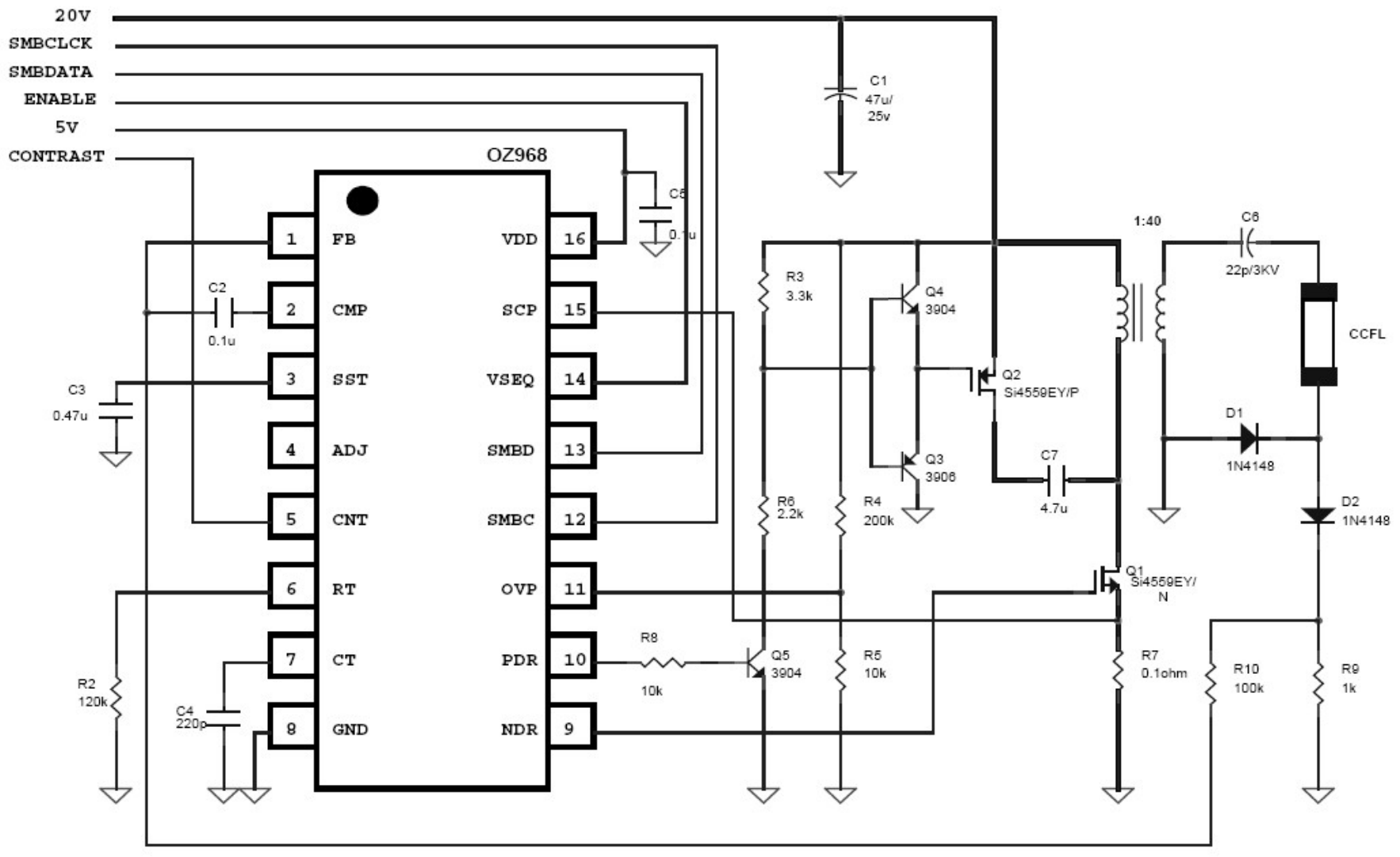

Figure 1. Typical Application Circuit