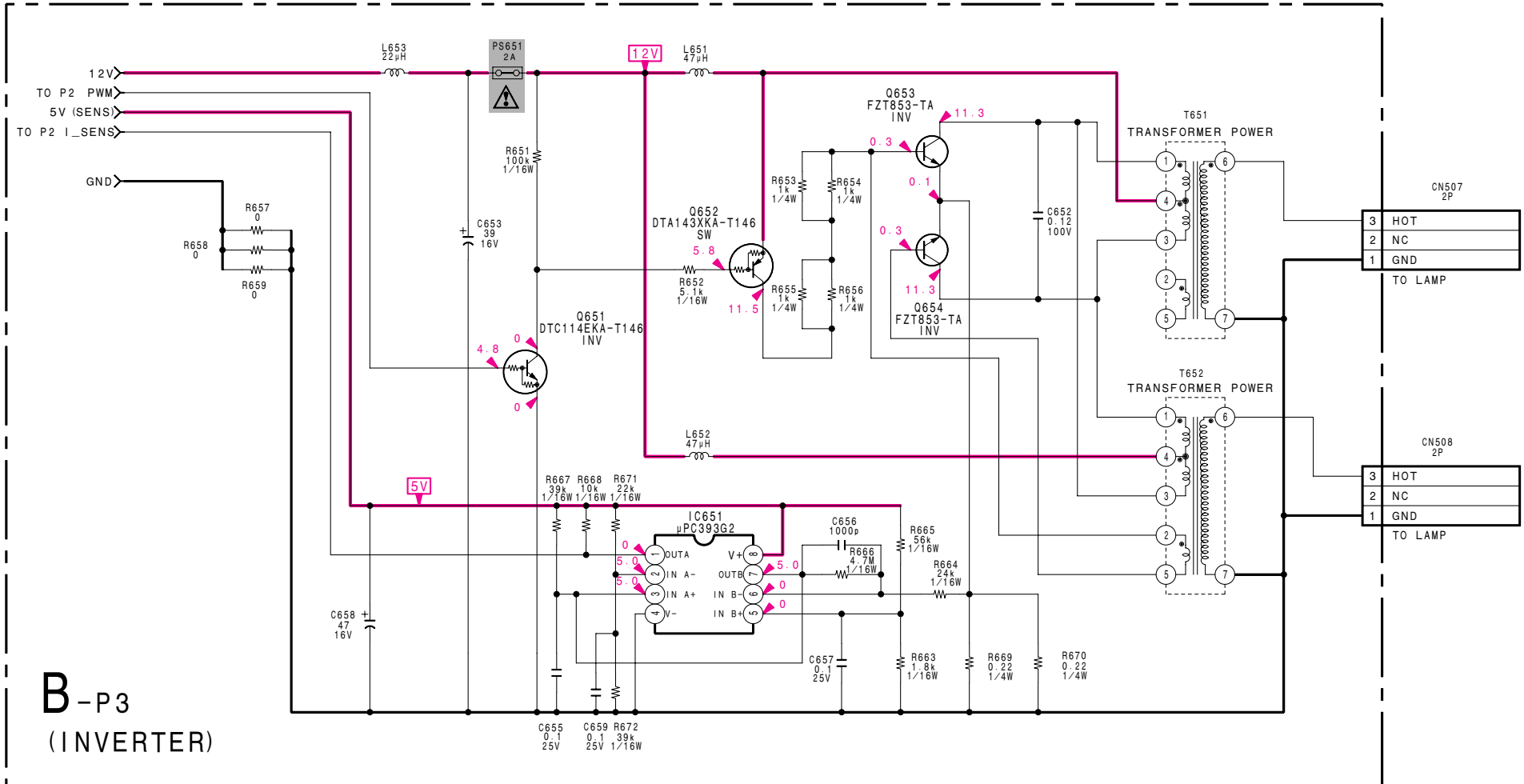
12V
TO P2 PWM
5V (SENS)
TO P2 I_SENS
GND
L653 22μH
PS651 2A
12V
L651 47μH
R651 100k 1/16W
C653 39 16V
R657 0
R658 0
R659 0
Q651 DTC114EKA-T146 INV
4.8
0
0
Q652 DTA143XKA-T146 SW
5.8
11.5
R652 5.1k 1/16W
R653 1k 1/4W
R654 1k 1/4W
R655 1k 1/4W
R656 1k 1/4W
Q653 FZT853-TA INV
0.3
11.3
0.1
Q654 FZT853-TA INV
0.3
11.3
C652 0.12 100V
T651 TRANSFORMER POWER
T652 TRANSFORMER POWER
CN507 2P
3 HOT
2 NC
1 GND
TO LAMP
CN508 2P
3 HOT
2 NC
1 GND
TO LAMP
L652 47μH
5V
R667 39k 1/16W
R668 10k 1/16W
R671 22k 1/16W
IC651 μPC393G2
OUTA
IN A-
IN A+
V-
V+
OUTB
IN B-
IN B+
0
5.0
5.0
5.0
0
0
C656 1000p
R666 4.7M 1/16W
R665 56k 1/16W
R664 24k 1/16W
C658 47 16V
C657 0.1 25V
R663 1.8k 1/16W
R669 0.22 1/4W
R670 0.22 1/4W
C655 0.1 25V
C659 0.1 25V
R672 39k 1/16W
B-P3
(INVERTER)